LEGEND

Router

Cabin

Terminal Controller Safety Telephone

Cell Site Gateway

Panel Antenna

AuC	Authentication Center
BTS	Base Transceiver Station
BSC	Base Station Controller
EIR	Equipment Identification Register
GC	Group Call
GCR	Group Call Register
HLR	Home Location Register
LAN	Local Area Network
MSC	Mobile Switching Center
SMS	Short Message Service
VLR	Visitor Location Register
VMS	Voice Mail Service
OMC-R	Operation Manteinence Center-Radio
OMC-S	Operation Manteinence Center-Services
ISDN	Integrated Services Digital Network
OMC	Operation Mainteinance Center
TCU	Transcoding Unit
TNMS	Transport Network Managment System
SDH	Synchronous Digital Hierarchy
PLMN	Public Land Mobile Network

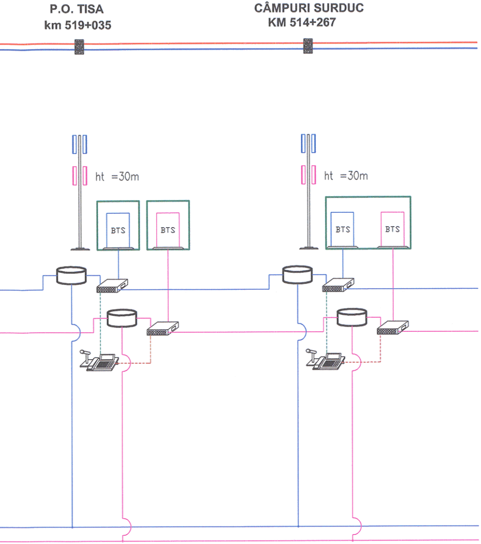
P.O. TISA
km 519+035
CÂMPURI SURDUC
KM 514+267
ht =30m
BTS
BTS
ht =30m
BTS
BTS

Indice Index	Data Date	Descriere Description	Semnatura Signature	Semnatura Signature	Semnatura Signature	Semnatura Signature
Modificare / Revision	E					
	D					
	C					
	B					
	A					

European Investment Bank

MINISTERUL TRANSPORTURILOR

BENEFICIAR / BENEFICIARY :

COMPANIA NAȚIONALĂ DE CĂI FERATE "CFR" SA

PROIECTANT / DESIGNER: PÖYRY			Data / Date	Semnatura Signature
Aprobat Approved	Sef de echipa Team leader	C. Teodorescu	01.2013	
Verificat Checked	Expert Cheie Key Expert	R. Trommer	01.2013	R.Trom
Subcontractant / Subcontractor	VIOTOP			
Aprobat Approved	Adjunct Sef de echipa Deputy Team leader	A.M. Baicu	01.2013	
Proiectat Designed	Inginer Engineer	A. Sopov	01.2013	

"Reabilitarea liniei c.f. Frontier ă - Curtici - Simeria, parte componentă a coridorului IV Pan - European pentru circula ţia trenurilor cu viteză maximă de 160 km/h"
Tronsonul 2-B : cap Y Bârzava - cap Y Ilteu
"Rehabilitation of the Railway Line Border - Curtici - Simeria, component Part of the IV Pan - European Corridor for the Trains Circulation with maximum speed of 160 km/h"
Section 2-B : end Y Bârzava - end Y Ilteu

Project 9i
35311.1

Faza / Phase:
PTh +CS / TD + TS

Denumire desen / Drawing Title :
Arhitectura sistemului GSM-R
GSM-R architecture

Scara / Scale	Revizia / Revision	Cod desen / Drawing Code	Nr / No
-	1/16.05.2013	PT.00.05.00.SM.004	01/01

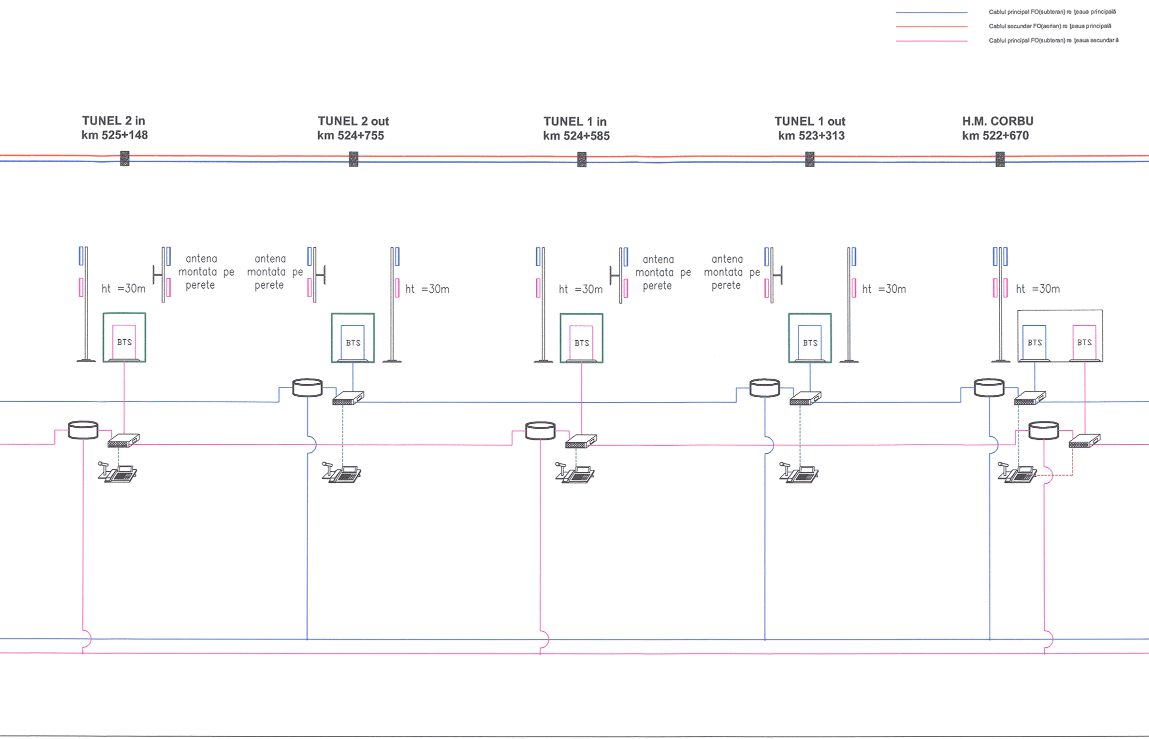
Cablul principal FO(subteran) reţeaua principală
Cablul secundar FO(aerian) reţeaua principală
Cablul principal FO(subteran) reţeaua secundară
TUNEL 2 in
km 525+148
TUNEL 2 out
km 524+755
TUNEL 1 in
km 524+585
TUNEL 1 out
km 523+313
H.M. CORBU
km 522+670
ht =30m
antena montata pe perete
antena montata pe perete
ht =30m
ht =30m
antena montata pe perete
antena montata pe perete
ht =30m
ht =30m
BTS
BTS
BTS
BTS
BTS
BTS

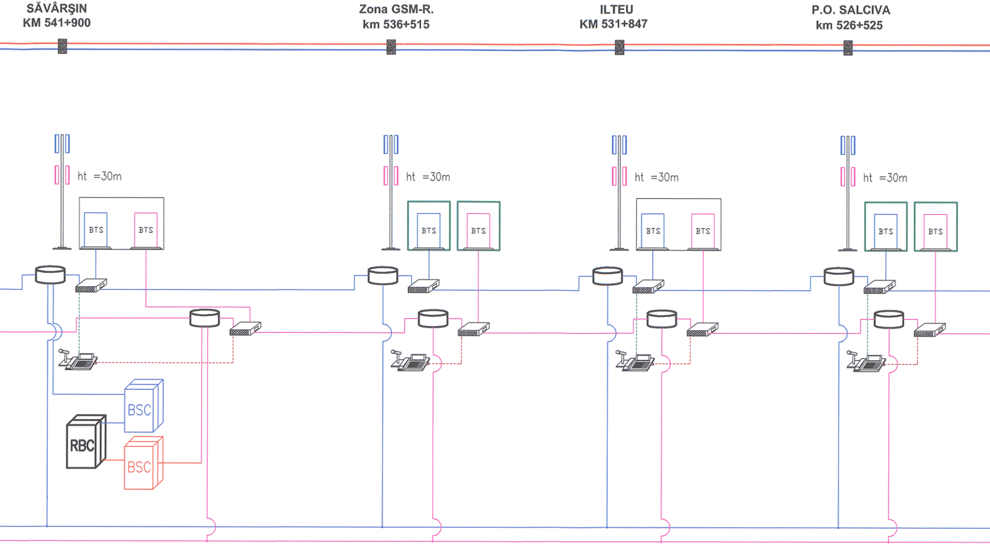
SĂVÂRŞIN
KM 541+900
Zona GSM-R.
km 536+515
ILTEU
KM 531+847
P.O. SALCIVA
km 526+525
ht =30m
ht =30m
ht =30m
ht =30m
BTS
BTS
BTS
BTS
BTS
BTS
BTS
BTS
BSC
BSC
RBC

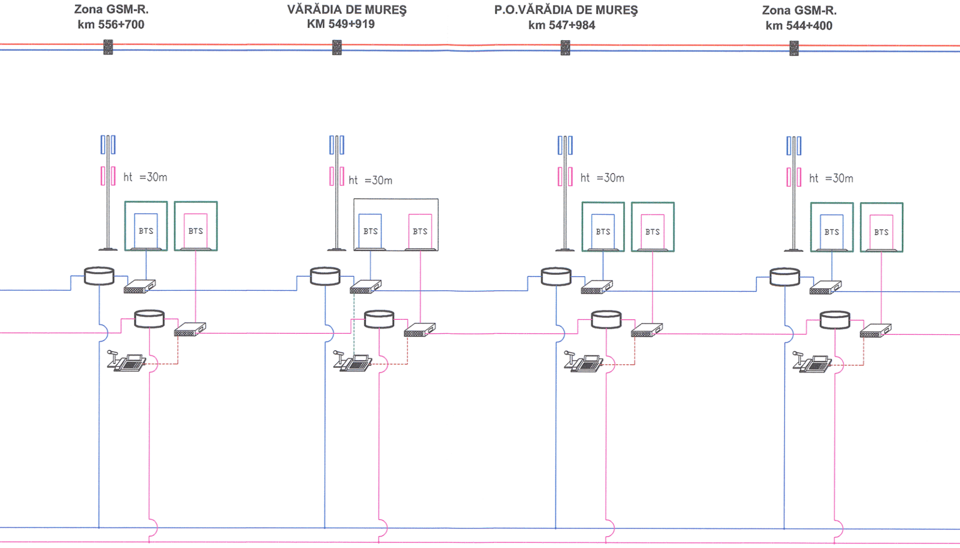

Zona GSM-R.
km 556+700
VĂRĂDIA DE MUREŞ
KM 549+919
P.O.VĂRĂDIA DE MUREŞ
km 547+984
Zona GSM-R.
km 544+400
ht =30m
BTS
BTS
ht =30m
BTS
BTS
ht =30m
BTS
BTS
ht =30m
BTS
BTS

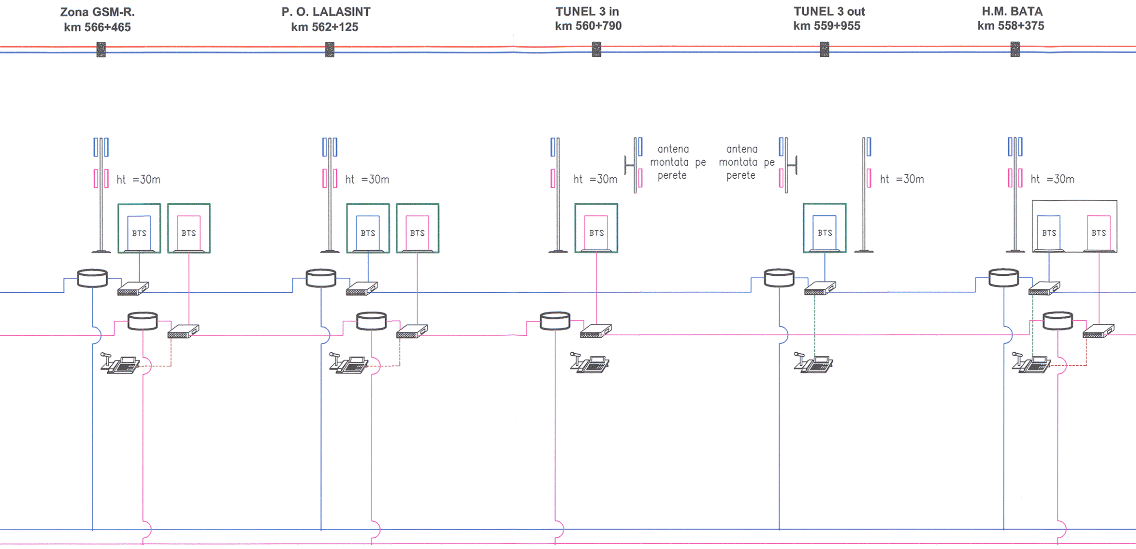
Zona GSM-R.
km 566+465
P. O. LALASINT
km 562+125
TUNEL 3 in
km 560+790
TUNEL 3 out
km 559+955
H.M. BATA
km 558+375
ht =30m
BTS
BTS
ht =30m
BTS
BTS
ht =30m
BTS
antena montata pe perete
antena montata pe perete
BTS
ht =30m
ht =30m
BTS
BTS

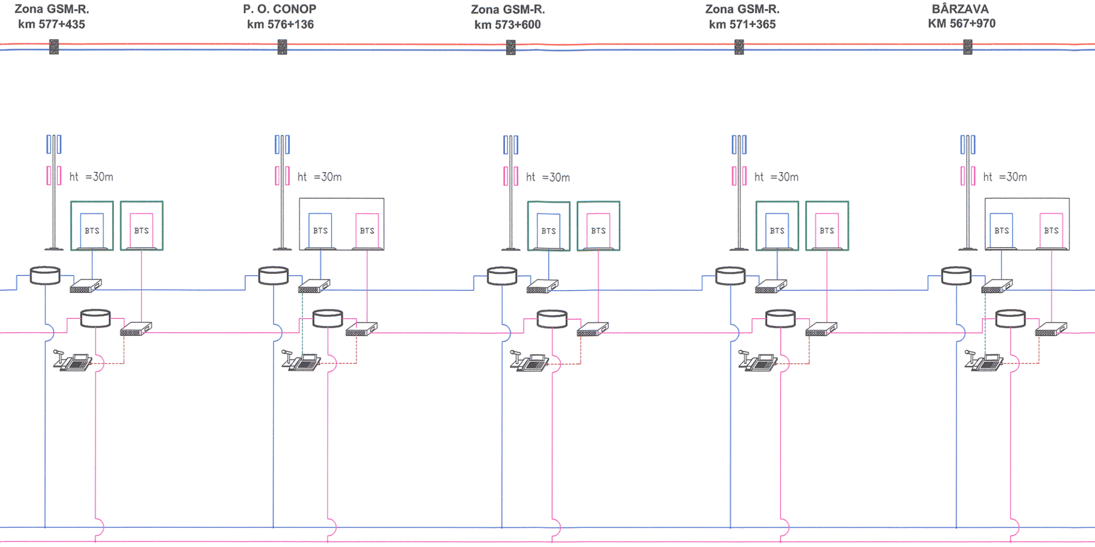
Zona GSM-R.
km 577+435
P. O. CONOP
km 576+136
Zona GSM-R.
km 573+600
Zona GSM-R.
km 571+365
BÂRZAVA
KM 567+970
ht =30m
ht =30m
ht =30m
ht =30m
ht =30m
BTS
BTS
BTS
BTS
BTS
BTS
BTS
BTS
BTS
BTS

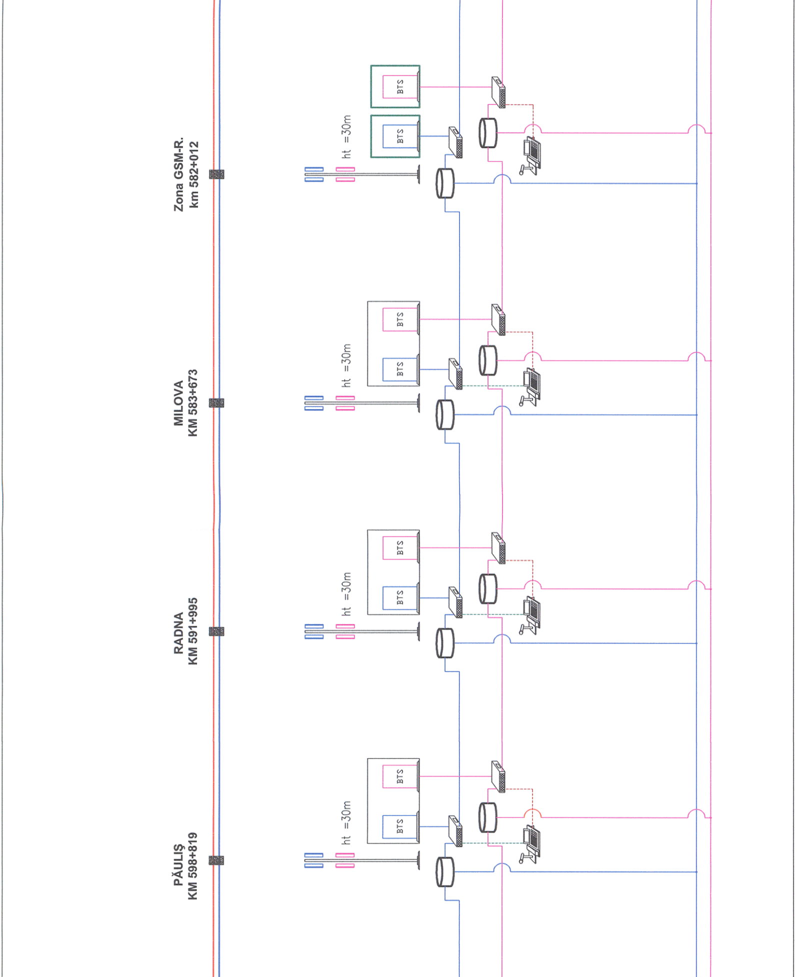
Zona GSM-R.
km 582+012
ht =30m
BTS
BTS
MILOVA
KM 583+673
ht =30m
BTS
BTS
RADNA
KM 591+995
ht =30m
BTS
BTS
PĂULIŞ
KM 598+819
ht =30m
BTS
BTS

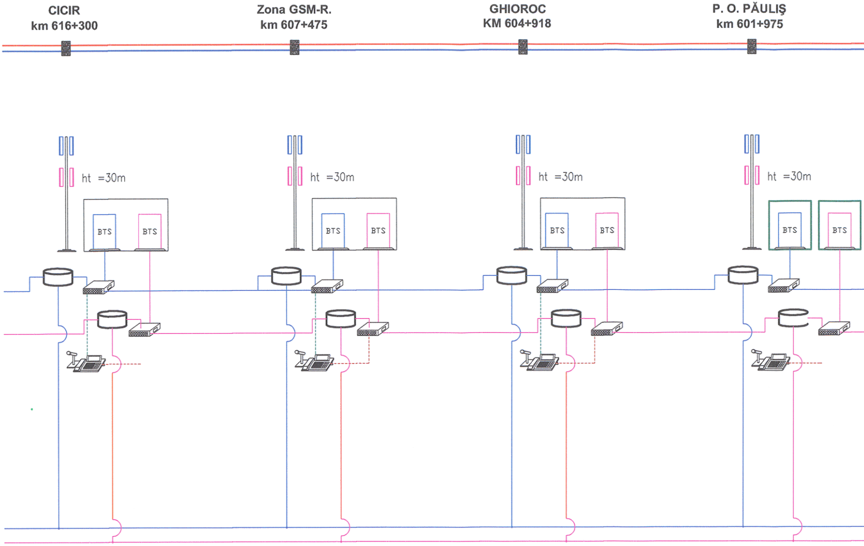
CICIR
km 616+300
Zona GSM-R.
km 607+475
GHIOROC
KM 604+918
P. O. PĂULIŞ
km 601+975
ht =30m
ht =30m
ht =30m
ht =30m
BTS
BTS
BTS
BTS
BTS
BTS
BTS
BTS